# ALPHA

## 3478DVJ125P62

EAN 4031582306330

Fixed castor, Fork made of pressed steel, bright zinc plated, blue passivated, wheel axle with nut, plate fitting.
Wheel centre made of pressed steel, Tread: solid rubber, black, with threadguards, roller bearing



Picture may differ from original product

### Technical Data

| | |
|---|---|
| Wheel diameter | 125 mm |
| Wheel width | 37 mm |
| Castor width | 85 mm |
| Size of Plate | 103 x 85 mm |
| Plate hole centres | 80/77 x 60 mm |
| Plate hole | 9 mm |
| Overall height | 155 mm |
| Temperature | - 20 / + 85 °C |
| Standard | EN 12532 |
| Weight | 0.96 kg |
| Hardness of tread | Shore A 80 |
| Load capacity | 100 kg |
| Load capacity (static) | 200 kg |

### Dimensions

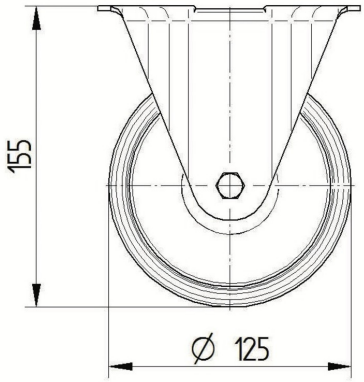


### Advantages at a glance

| | |
|---|---|
| Roll performance | ● ● ● ○ ○ |
| Movement noise | ● ● ● ○ ○ |
| Attrition | ● ● ○ ○ ○ |
| Corrosion resistance | ● ● ● ○ ○ |

© Copyright 2024 TENTE International **www.tente.com** 01/01/2024

# ALPHA

## 3478DVJ125P62

EAN 4031582306330

BETTER MOBILITY. BETTER LIFE.

### Structure & Mounting

